Mono County
Community Development Department

PO Box 3569
Mammoth Lakes, CA 93546
760.924.1800, fax 924.1801
commdev@mono.ca.gov

Building Division

PO Box 8
Bridgeport, CA 93517
760.932.5420, fax 932.5431
www.monocounty.ca.gov

Residential Solar Panel Installation

PRESCRIPTIVE INSTALLATION REQUIREMENTS AND RESTRICTIONS

The Prescriptive Installation Procedure is a streamlined process designed to assist the homeowner in obtaining Building Division approval for installing solar panels, using pre-approved installation methods, hardware, and details.

The following requirements and restrictions apply to residential solar panels under the Prescriptive Installation procedure. If the existing site conditions or proposed solar panel system do not meet the requirements below, or if the Property Owner does not agree to abide by the requirements and restrictions below, the solar installation is required to be designed by a licensed Professional Engineer.

For convenience, a flowchart of the eligibility requirements is included on Page 4.

1. Only photovoltaic (PV) solar panels shall be used under Prescriptive Installation. Solar thermal, solar hot water (SHW), solar water heating (SWH), chemical refrigerant (HFC/CFC/HCFC), pole or ground-mounted systems are not eligible for Prescriptive Installation and require an engineered design.

2. The building on which solar panels are to installed shall be a Single-Family Detached Residence or Duplex Residence (Group R-3), or a utility building (Group U) accessory to the residence, such as a private garage, barn, stable or shed, subject to approval by the Building Official. Commercial buildings, apartment houses, boarding houses, vacation timeshare properties, and residences with child care facilities, adult care facilities, or congregate living facilities require an engineered design.

3. At locations where Ground Snow Load, p_g, is less than 70 psf (54 psf Flat-Roof Snow Load, p_f), the added weight of solar panels can represent an increase in roof loading greater than 5 percent. At these locations, an engineered design is required, unless a Building Permit was issued for the original construction or if the building meets other criteria acceptable to the Building Official.

4. The building on which solar panels are to be installed shall have a roof height not higher than 40 feet above the surrounding exterior grade of the building. Buildings with a roof height greater than 40 feet require an engineered design.

5. The building shall have a wood-framed roof, with plated or nailed trusses, dimensioned lumber rafters, wood I-joist rafters, or other structural composite lumber (SCL) rafters or joists. Other types of wood framing or steel trusses or joists require an engineered design.

6. The building's roof shall have plywood or oriented-strand board (OSB) roof sheathing. Lumber sheathing (straight or diagonal) or metal decking requires an engineered design.

7. Roofing materials shall not consist of wood, such as wood shakes or shingles.

8. Solar panels shall be mounted on manufactured racks with legs or stand-off brackets fastened directly to each roof rafter or roof truss covered by the panels. The use of ballasted footing mounts, wood-framed or cold-formed-metal-framed stands or fixtures, pole mounts, or other mounting systems require an engineered design.

9. Solar panels shall be mounted no more than 12 inches above the roof surface. Mounting systems that exceed this limit require an engineered design.

10. Solar panels shall be fixed in position. The use of adjustable or moveable panels or mounts requires an engineered design.

11. Sun tracker systems shall not be used. Use of a sun-tracker system requires an engineered design.

12. At locations where Ground Snow Load, p_g, is less than 105 psf (80 psf Flat-Roof Snow Load, p_f), only one layer of roofing is permitted at members supporting the solar panels. No new roofing shall be installed over existing roofing without first removing the existing roofing. Existing multiple layers of roofing shall be removed and replaced with a single layer of roofing prior to installation of the solar panel system. The Property Owner must understand that re-roofing by installing an additional layer over the existing roofing will no longer be permitted at areas supporting solar panels.

13. Where roofing consists of metal shingles, metal deck, slate, or concrete or clay tiles, solar panels shall be installed within 12 inches of the ridge of the roof. *(The Fire Official's approval is required to waive the 36-inch clear distance at the ridge, provided an alternative smoke ventilation method exists or it is determined that vertical ventilation techniques will not be employed.)*

14. Where roofing consists of composition or asphalt shingles or roll roofing, or wood shingles or shakes, and the roof pitch exceeds 6-in-12 (26.6°), solar panels shall be installed within 12 inches of the ridge of the roof. *(The Fire Official's approval is required to waive the 36-inch clear distance at the ridge, provided an alternative smoke ventilation method exists or it is determined that vertical ventilation techniques will not be employed.)* Where the roof pitch is 6-in-12 or less, this limit does not apply.

15. Solar panels shall not be installed, attached, or anchored to roof eaves or overhangs.

16. Solar panel racks and leg or stand-off brackets shall be installed in accordance with the Prescriptive Installation details. A rack leg or stand-off bracket shall be installed at, and fastened directly to, each roof rafter or roof truss covered (shaded) by the panels. The maximum allowable solar panel area per each fastener shall be as shown in Tables RS-1 through RS-4. If the limit shown in the tables is exceeded, additional racks shall be installed as necessary to reduce the panel area to within allowable values.

17. All work shall conform to the California Building Code (CBC) and the California Fire Code (CFC). All terms and conditions of the Building Division's approval shall be observed.

18. A qualified roofer shall be engaged to install or repair roofing, flashing, and sealing to meet the weather protection requirements of the Building Code and warranty conditions of the roofing materials. The Property Owner must understand that failure to properly flash and seal the roof may result in water damage to the structure and may violate any existing roofing warranty.

19. Electrical installation shall be in conformance with the California Electrical Code (CEC). A licensed Electrician shall perform all electrical work.

20. If the residence is located within the jurisdiction of a Homeowner's Association (HOA), written approval for the solar panel installation must be obtained. A copy of the written approval must be provided to the Building Division.

21. Prior to issuance of Building Division approval, and again one year following completion of solar panel installation, the Property Owner, or a licensed Contractor or Professional Engineer on behalf of the Property Owner, shall perform an inspection of the building and roof system, and shall certify that no adverse conditions exist and that the structure is in a satisfactory condition. Items to be inspected shall include:

    a. Overall condition of the building, noting any distress such as building sliding off the foundation, building or story leaning, racking damage to walls, or any collapse.

    b. Condition of the roof framing, including noticeable or excessive deflection (sagging); buckling, warping, or twisting of rafters or truss members; cracked or split wood members; deterioration or dry rot; or missing or damaged connectors or hangers.

    c. Condition of the roof sheathing, including noticeable or excessive deflection (sagging), soft spots, deterioration or dry rot, or evidence of roof leaks.

OWNER'S CERTIFICATION

I hereby certify that I have read and understand these requirements and restrictions and agree to comply with these requirements and restrictions and with the terms and conditions of the approval issued by Mono County.

_____
Printed Name of Property Owner

_____ _____
Signature of Property Owner Date

QUICK-REFERENCE FLOWCHART FOR PRESCRIPTIVE INSTALLATION ELIGIBILITY REQUIREMENTS

Use this flowchart to quickly determine whether or not your Solar installation qualifies for the Prescriptive Installation procedure.

Prescriptive Installation is a streamlined process designed to assist the homeowner in obtaining Building Division approval for installing solar panels, using pre-approved installation methods, hardware, and details.

Solar installations that do not meet the eligibility requirements for Prescriptive Installation are required to be designed by a licensed Professional Engineer.

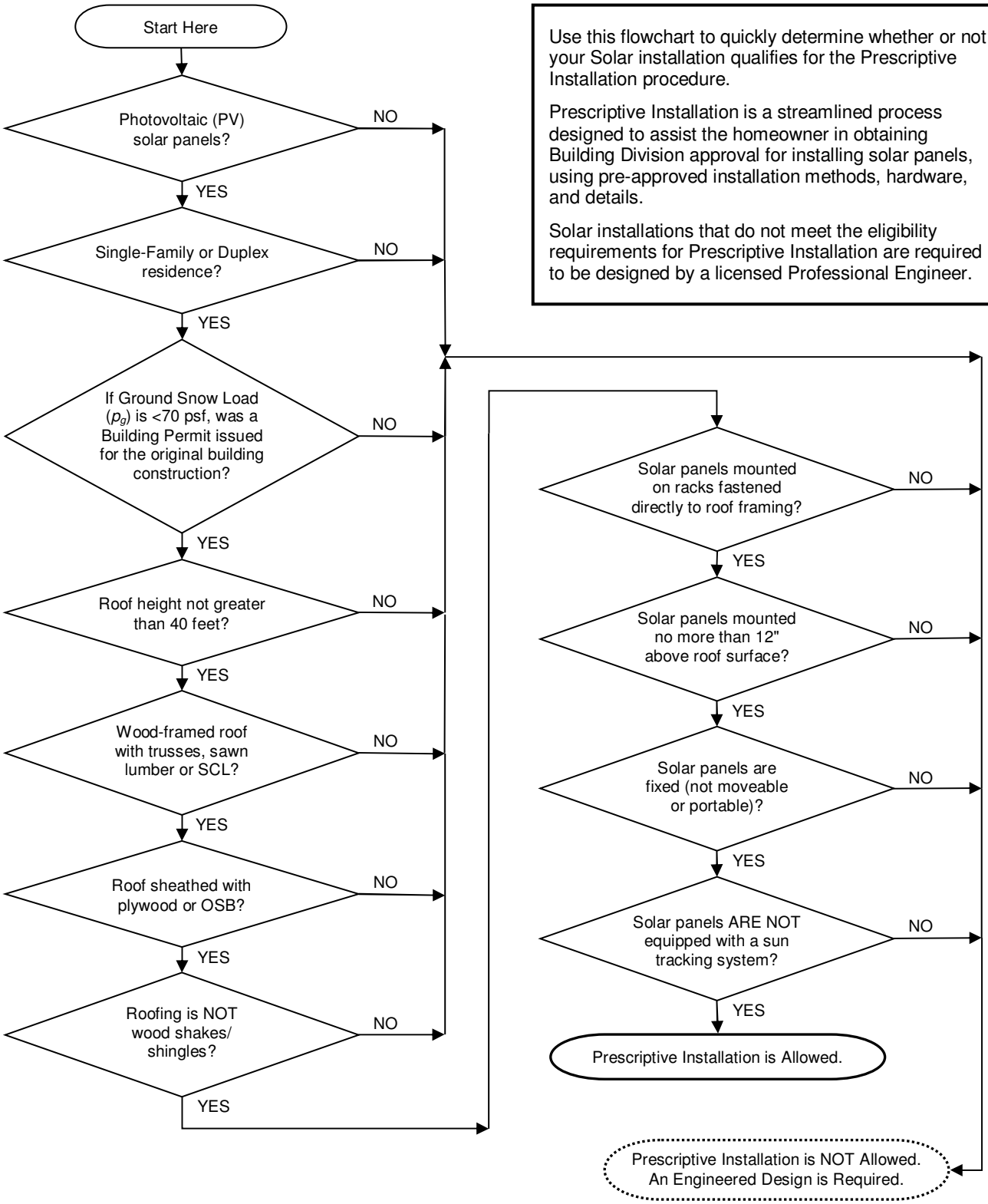

Mono County
Community Development Department

PO Box 3569
Mammoth Lakes, CA 93546
760.924.1800, fax 924.1801
commdev@mono.ca.gov

Building Division

PO Box 8
Bridgeport, CA 93517
760.932.5420, fax 932.5431
www.monocounty.ca.gov

Residential Solar Panel Installation

PROJECT DATA, INSPECTION, AND OWNER'S CERTIFICATION

1. PROPERTY OWNER	*2.* DATE
3. PROPERTY ADDRESS	*4.* CITY, STATE
5. ASSESSOR'S PARCEL NUMBER (APN)	*(Assessor's Parcel Number may be obtained by using the online Mono County Parcel Information System, located at* https://gis.mono.ca.gov/parcelviewer*)*
6. ELEVATION FEET	*(Site Elevation may be determined by looking up the Property Address in Google Earth and hovering the mouse cursor over the residence. Elevation is shown at the bottom of the screen, next to Latitude and Longitude. Google Earth is available online at:* http://earth.google.com*)*
7. GROUND SNOW LOAD p_g = PSF	*(Ground Snow Load may be obtained from the "Building Codes and Design Standards" page within the Building Permit Application package [available online at:* http://www.monocounty.ca.gov/building*], or by contacting the Building Division.)*
8. IS THE PROPERTY LOCATED WITHIN THE JURISDICTION OF A HOMEOWNER'S ASSOCIATION (HOA)? ☐ Yes ☐ No	*(If located within the jurisdiction of a HOA, provide a copy of written approval when submitting this form.)*

DESCRIPTION OF BUILDING

9. TYPE OF BUILDING ☐ Single-Family Residence ☐ Duplex Residence	*(No Commercial buildings, apartment houses, boarding houses, vacation timeshare properties, residences with child care facilities, adult care facilities, congregate living facilities, etc.)*
10. WAS A BUILDING PERMIT ISSUED FOR THE ORIGINAL CONSTRUCTION OF THE BUILDING? ☐ Yes ☐ No ☐ Unknown	

11. YEAR BUILT	*12.* NO. OF STORIES ☐ Basement	*13.* OVERALL HEIGHT ☐ 40 feet or Less ☐ Greater than 40 feet

14. BUILDING LENGTH AND WIDTH LENGTH, B = FT × WIDTH, W = FT	*15.* ROOF STYLE ☐ Gable ☐ Hip ☐ Monoslope

16. ROOF SLOPE S = :12	*17a.* ARE THERE MULTIPLE ROOF LEVELS? ☐ Yes ☐ No	*17b.* IF MULTIPLE, WHERE WILL PANELS BE MOUNTED? ☐ Upper Roof ☐ Lower Roof ☐ Both

18a. ROOFING TYPE ☐ Composition / Asphalt Shingles or Roll Roofing ☐ Concrete Tile ☐ Clay Tile or Spanish Tile ☐ Slate ☐ Metal Shingles / Metal Deck ☐ Wood Shingles / Shakes *(Not allowed)*	*18b.* EXISTING ROOFING LAYERS ☐ One ☐ Multiple (2 or more) *(Multiple layers of roofing must be removed and replaced with a single layer of roofing.)*

DESCRIPTION OF BUILDING *(Continued)*

19a. ROOF RAFTERS / TRUSSES

- ☐ Wood Trusses, Plated *(Manufactured, with "gang-nail" metal plates)*
- ☐ Wood Trusses, Carpenter *(Nailed, often with plywood gussets)*
- ☐ Dimensioned Lumber Rafters (2x10, 2x12, etc.)
- ☐ Wood I-Joists / LVL / PSL / Other Structural Composite Lumber
- ☐ Glulam Beams *(Not common as rafters in residential construction)*
- ☐ Wood Open-Web Joists *(Not common in residential construction)*
- ☐ Cold-Formed Light-Gauge Metal Framing *(Not common in residential construction)*
- ☐ Other Steel *(Not common in residential construction)*

19b. RAFTER / TRUSS SPACING

Sr = IN. O.C.

20a. ROOF SHEATHING

- ☐ Plywood / Oriented-Strand Board (OSB)
- ☐ Diagonal Lumber Sheathing
- ☐ Straight Lumber Sheathing
- ☐ Metal Deck

20b. SHEATHING THICKNESS *(if known)*

IN.

SOLAR PANEL INFORMATION

(Your Solar Panel Manufacturer and Rack System Manufacturer should provide you with the following information. Please include Manufacturer's Data Sheets when submitting this form to the Building Division.)

21. SOLAR PANEL TYPE

☐ Photovoltaic (PV) *(No Solar Hot Water, HFC/ CFC, or other systems)*

22. SYSTEM TYPE

☐ Stand Alone System ☐ Grid-Tied

23. SYSTEM RATING

KW

24. TOTAL SQUARE FOOT AREA OF SOLAR PANEL ARRAY

SQ. FT.

25. TOTAL WEIGHT OF PANELS, RACKS AND STAND-OFFS

LBS

26. MANUFACTURER'S SOLAR PANEL SNOW LOAD RATING

PSF

27a. PANEL MANUFACTURER

27b. PANEL MODEL

28a. RACK / MOUNTING SYSTEM MANUFACTURER

28b. RACK / MOUNTING SYSTEM MODEL

29. RACK MANUFACTURER RECOMMENDED ANCHOR LAG SCREW SIZE

d_s = ☐ 5/16" diameter ☐ 3/8" diameter

INITIAL INSPECTION OF BUILDING AND ROOF SYSTEM

30. GENERAL CONDITION OF BUILDING

Sagging Roof Surfaces:	☐ None	☐ Minor*	☐ Moderate*	☐ Severe*
Building Off Foundation:	☐ None	☐ Minor*	☐ Moderate*	☐ Severe*
Building or Story Leaning:	☐ None	☐ Minor*	☐ Moderate*	☐ Severe*
Racking Damage to Walls:	☐ None	☐ Minor*	☐ Moderate*	☐ Severe*
Building Collapse, Partial Collapse:	☐ None	☐ Minor*	☐ Moderate*	☐ Severe*

** Please explain in Box 33, below.*

31. ROOF SHEATHING

Noticeable or Excessive Deflection:	☐ None	☐ Minor*	☐ Moderate*	☐ Severe*
Soft Spots:	☐ None	☐ Minor*	☐ Moderate*	☐ Severe*
Roof Leaks:	☐ None	☐ Minor*	☐ Moderate*	☐ Severe*
Deterioration:	☐ None	☐ Minor*	☐ Moderate*	☐ Severe*
Dry Rot or Corrosion:	☐ None	☐ Minor*	☐ Moderate*	☐ Severe*

** Please explain in Box 33, below.*

INITIAL INSPECTION OF BUILDING AND ROOF SYSTEM *(Continued)*

32. ROOF RAFTERS / JOISTS / TRUSSES

Noticeable or Excessive Deflection:	☐ None	☐ Minor*	☐ Moderate*	☐ Severe*
Buckled, Warped, or Twisted Members:	☐ None	☐ Minor*	☐ Moderate*	☐ Severe*
Cracked or Split Members:	☐ None	☐ Minor*	☐ Moderate*	☐ Severe*
Deterioration:	☐ None	☐ Minor*	☐ Moderate*	☐ Severe*
Dry Rot or Corrosion:	☐ None	☐ Minor*	☐ Moderate*	☐ Severe*
Missing Members:	☐ None	☐ Minor*	☐ Moderate*	☐ Severe*
Missing Connectors or Hangers:	☐ None	☐ Minor*	☐ Moderate*	☐ Severe*
Connector or Hanger Distress or Failure:	☐ None	☐ Minor*	☐ Moderate*	☐ Severe*

** Please explain in Box 33, below.*

33. EXPLANATION OR OTHER NOTES

OWNER'S CERTIFICATION

I HEREBY CERTIFY THAT THE ABOVE INFORMATION IS CORRECT AND THAT I (OR A LICENSED CONTRACTOR OR LICENSED PROFESSIONAL ENGINEER, ACTING ON MY BEHALF) HAVE CONDUCTED THE INITIAL INSPECTION OF THE BUILDING AND ROOF SYSTEM, HAVE DISCLOSED ANY DEFECTS THAT WERE OBSERVED, AND THAT THE RESULTS PROVIDED ABOVE ARE AN ACCURATE REPRESENTATION OF THE CONDITION OF THE BUILDING.

I UNDERSTAND THAT THE ISSUANCE OF A BUILDING PERMIT IS CONDITIONED UPON THE INFORMATION CONTAINED IN THIS FORM AND THE BUILDING PERMIT APPLICATION, AS WELL AS SUCH OTHER INFORMATION AS THE BUILDING OFFICIAL MAY DEEM NECESSARY TO THE ISSUANCE OF THE BUILDING PERMIT. I FURTHER UNDERSTAND THAT THE BUILDING OFFICIAL RESERVES THE RIGHT TO CONFIRM THE FINDINGS OF THE INITIAL INSPECTION.

THE SIGNATURE ON THIS DOCUMENT AUTHORIZES REPRESENTATIVES OF MONO COUNTY TO ENTER THE PROPERTY NOTED ON THIS FORM FOR INSPECTION PURPOSES AND ENFORCEMENT OF ALL CODE PROVISIONS PER THE TERMS AND CONDITIONS OF THE CALIFORNIA BUILDING CODE AND MONO COUNTY ORDINANCES.

_____
PRINTED NAME OF PROPERTY OWNER

_____ _____
SIGNATURE OF PROPERTY OWNER DATE

This page intentionally blank.

Mono County
Community Development Department

PO Box 3569
Mammoth Lakes, CA 93546
760.924.1800, fax 924.1801
commdev@mono.ca.gov

Building Division

PO Box 8
Bridgeport, CA 93517
760.932.5420, fax 932.5431
www.monocounty.ca.gov

Residential Solar Panel Installation

PRESCRIPTIVE INSTALLATION PROCEDURE

Instructions: Use Figures 1 through 9 and Tables A through D, on the following pages, to determine the required Dimensions, Mounting Bracket Spacing, and General Information, Panel and Rack Layout, and Mounting Bracket Detail Figures for your Solar Panel installation. Include this Summary form, together with the indicated Figures, when you submit your permit application to the Building Division.

For detailed step-by-step instructions, see the "Prescriptive Installation Procedure Flowchart," on Page 15, following the Figures.

1. PROPERTY OWNER	*2.* DATE
3. PROPERTY ADDRESS	*4.* CITY, STATE

(Record the following information . For step-by-step instructions, see the Prescriptive Installation Procedure Flowchart.)

5. GENERAL INFORMATION FIGURE

☐ Figure 1 ☐ Figure 2

6. CLEAR DISTANCE FROM RIDGE TO TOP OF SOLAR PANEL ARRAY

R = in.

7. RACK MANUFACTURER RECOMMENDED ANCHOR LAG SCREW SIZE

☐ 5/16" diameter ☐ 3/8" diameter

8. ALLOWABLE SOLAR PANEL AREA PER MOUNTING BRACKET (A_{allow}) TABLE

☐ Table A ☐ Table B ☐ Table C ☐ Table D

9. PANEL AND RACK LAYOUT FIGURE

☐ Figure 3 ☐ Figure 4 ☐ Figure 5 ☐ Figure 6

10. FINAL BRACKET SPACING, S1

S1 = in.

11. FINAL BRACKET SPACING, S2

S2 = in. *(Not applicable for Vertical Rack Layouts [Figures 5 and 6])*

12. RAFTER / TRUSS SPACING

Sr = in.

13. MOUNTING BRACKET DETAIL

☐ Figure 7 ☐ Figure 8 ☐ Figure 9

These Dimensions, Spacings, and Designated Figures form a part of the Construction Documents for the referenced Project. After approval by the Building Division, any changes in, modifications to, or deviations from these Dimensions, Spacings, and Designated Figures requires Building Division review and approval. The Building Division may require design by a licensed Professional Engineer for any such changes, modifications or deviations.

PO Box 3569
Mammoth Lakes, CA 93546
760.924.1800, fax 924.1801
commdev@mono.ca.gov

Building Division

PO Box 8
Bridgeport, CA 93517
760.932.5420, fax 932.5431
www.monocounty.ca.gov

Residential Solar Panel Installation

Figure 1. General Information – Gable Roofs

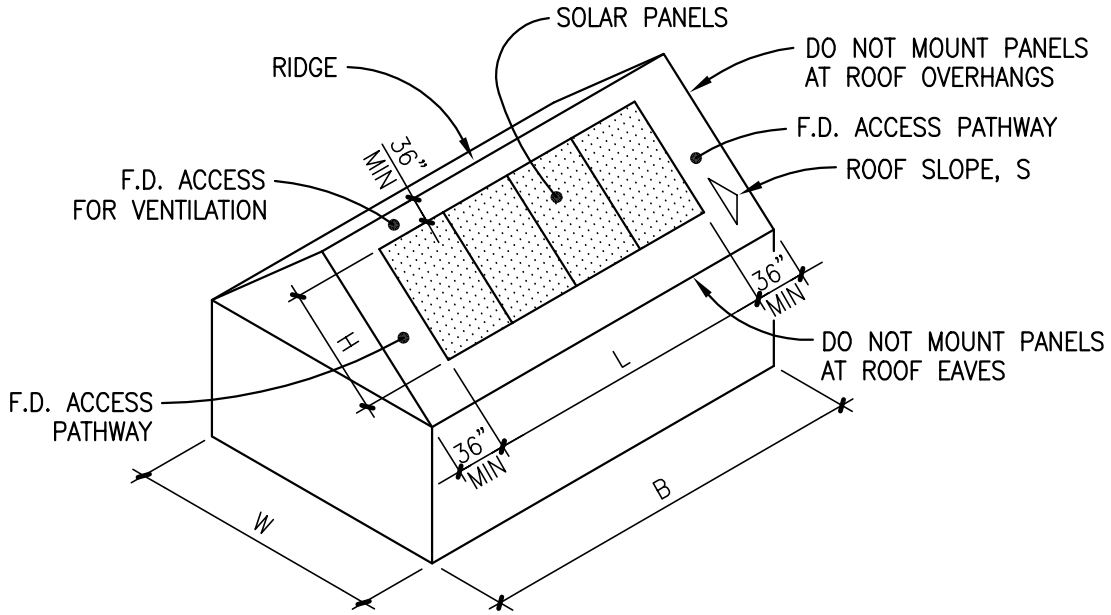

(a) GABLE ROOF

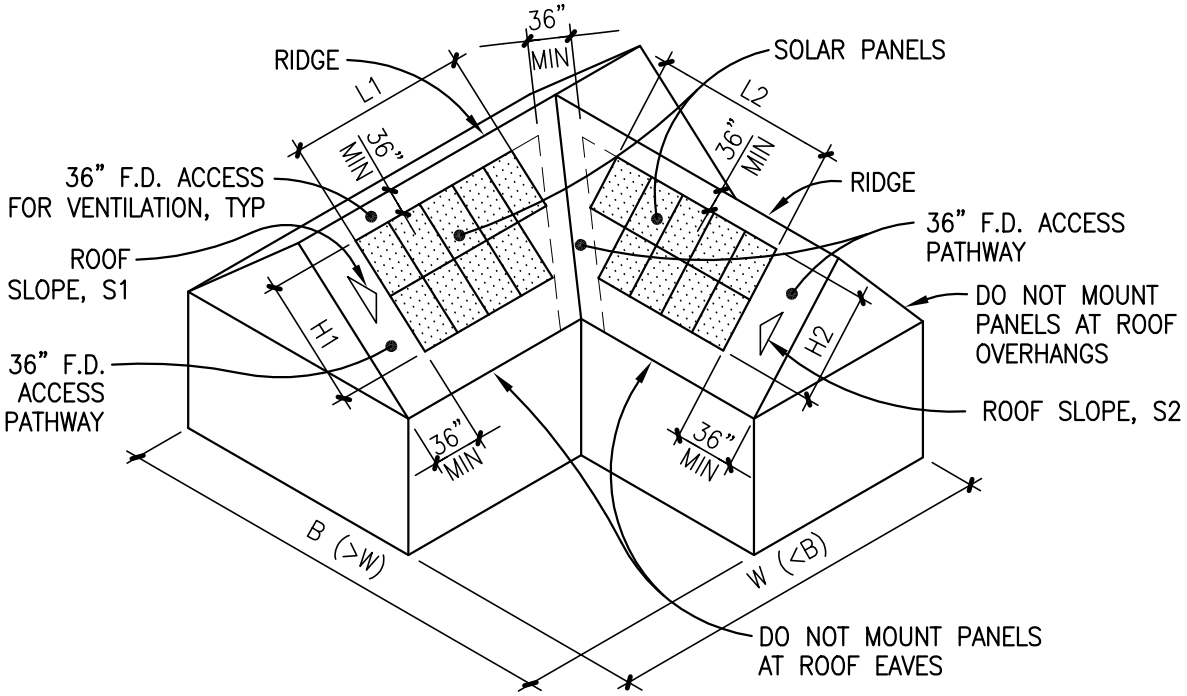

(b) CROSS GABLE ROOF W/ VALLEY

PO Box 3569
Mammoth Lakes, CA 93546
760.924.1800, fax 924.1801
commdev@mono.ca.gov

Building Division

PO Box 8
Bridgeport, CA 93517
760.932.5420, fax 932.5431
www.monocounty.ca.gov

Residential Solar Panel Installation

Figure 2. General Information – Hip and Monopitch Roofs

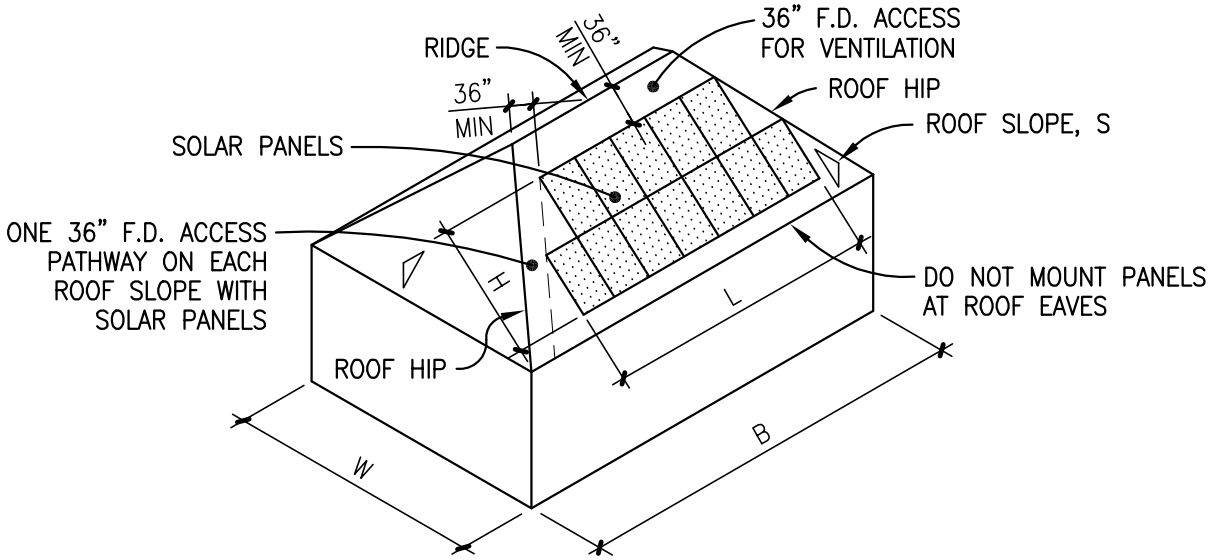

(a) HIP ROOF

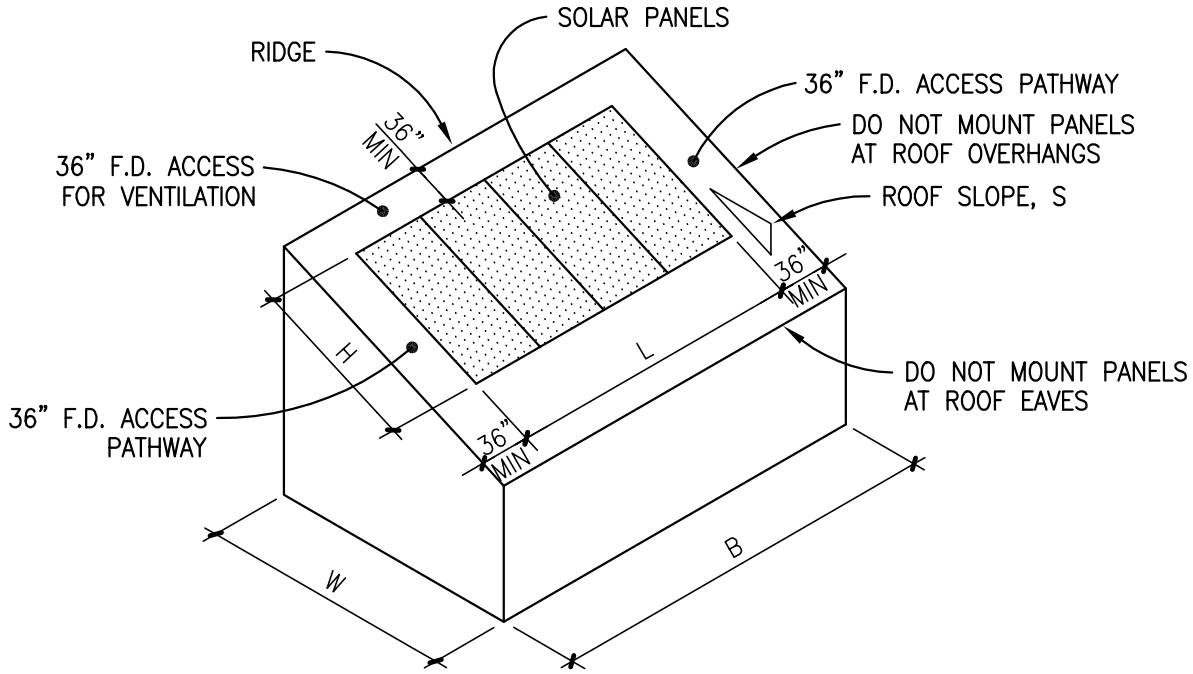

(b) MONOSLOPE ROOF

PO Box 3569
Mammoth Lakes, CA 93546
760.924.1800, fax 924.1801
commdev@mono.ca.gov

Building Division

PO Box 8
Bridgeport, CA 93517
760.932.5420, fax 932.5431
www.monocounty.ca.gov

Residential Solar Panel Installation

Figure 3. Horizontal Rack Layout with Portrait Panel Orientation

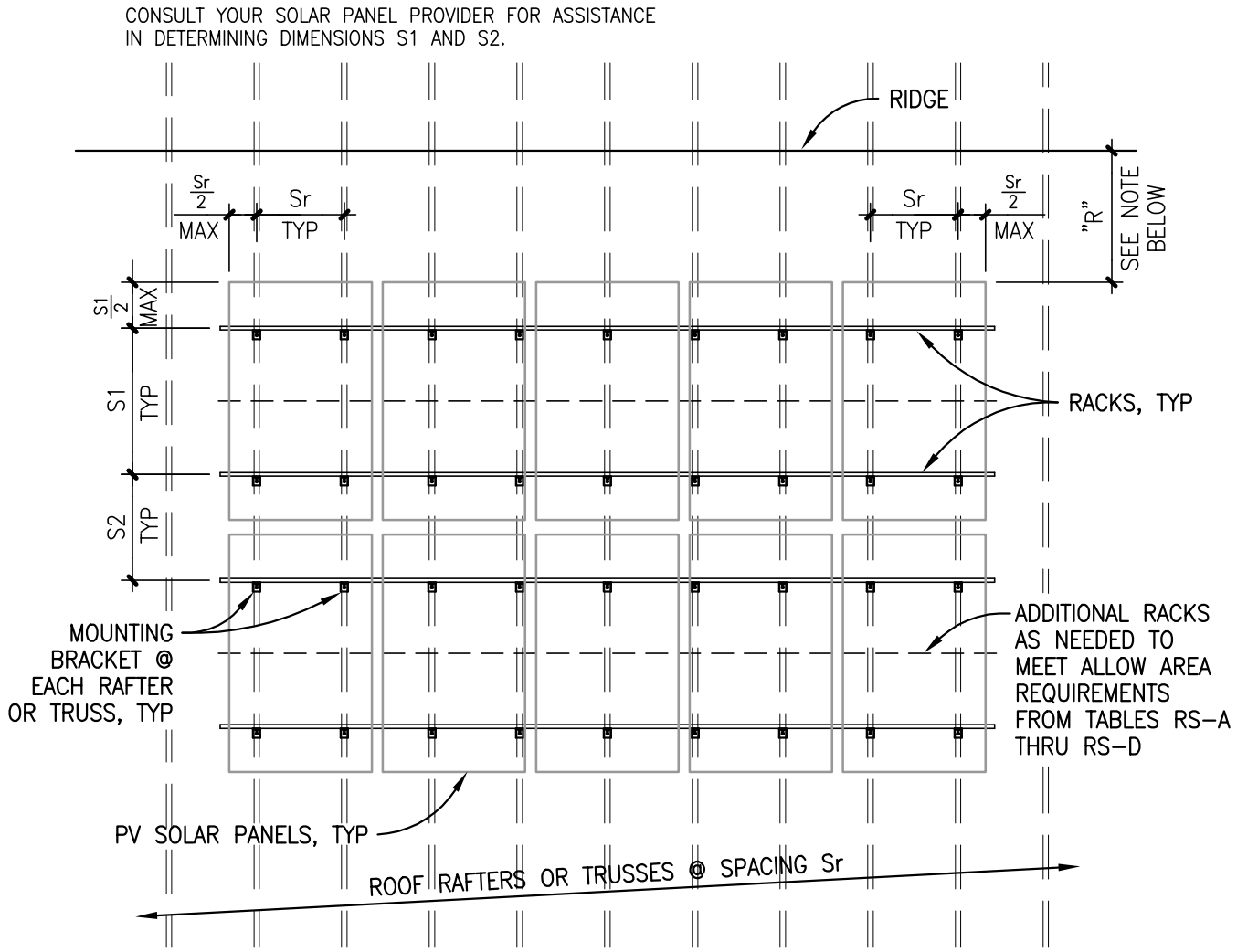

A_{actual}

SOLAR PANEL AREA PER MOUNTING BRACKET, A_{actual} (IN SQUARE FEET):

$$A_{actual} = \frac{S1 \times Sr}{144}, \text{ OR}$$

$$A_{actual} = \frac{S2 \times Sr}{144}, \text{ WHICHEVER IS GREATER.}$$

S1, S2, AND Sr ARE MEASURED IN INCHES.

DIMENSION "R" – CLEAR DISTANCE FROM RIDGE:

MAINTAIN 36" MINIMUM CLEARANCE FOR FIRE DEPARTMENT ACCESS. WHERE ROOF PITCH IS >6:12 (26.6°) OR WHERE ROOFING IS METAL SHINGLES, METAL DECK, SLATE, OR CONCRETE OR CLAY TILES, SOLAR PANELS SHALL BE INSTALLED WITHIN 12" OF RIDGE. FIRE OFFICIAL'S APPROVAL IS REQUIRED TO WAIVE THE 36" FIRE ACCESS AT THE RIDGE.

PO Box 3569
Mammoth Lakes, CA 93546
760.924.1800, fax 924.1801
commdev@mono.ca.gov

Building Division

PO Box 8
Bridgeport, CA 93517
760.932.5420, fax 932.5431
www.monocounty.ca.gov

Residential Solar Panel Installation

Figure 4. Horizontal Rack Layout with Landscape Panel Orientation

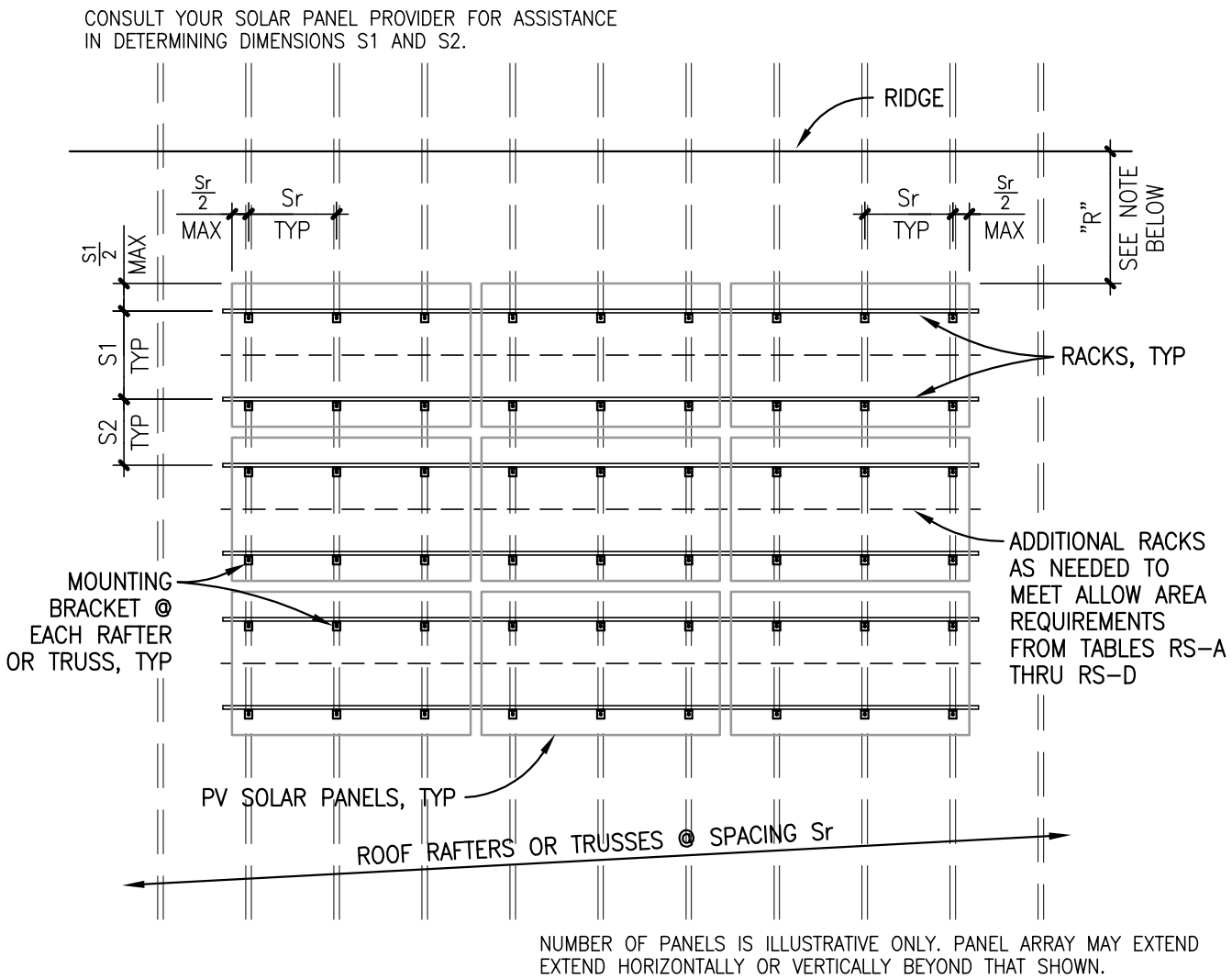

A_{actual}

SOLAR PANEL AREA PER MOUNTING BRACKET, A_{actual} (IN SQUARE FEET):

$$A_{actual} = \frac{S1 \times Sr}{144}, \text{ OR}$$

$$A_{actual} = \frac{S2 \times Sr}{144}, \text{ WHICHEVER IS GREATER.}$$

S1, S2, AND Sr ARE MEASURED IN INCHES.

DIMENSION "R" – CLEAR DISTANCE FROM RIDGE:

MAINTAIN 36" MINIMUM CLEARANCE FOR FIRE DEPARTMENT ACCESS. WHERE ROOF PITCH IS >6:12 (26.6°) OR WHERE ROOFING IS METAL SHINGLES, METAL DECK, SLATE, OR CONCRETE OR CLAY TILES, SOLAR PANELS SHALL BE INSTALLED WITHIN 12" OF RIDGE. FIRE OFFICIAL'S APPROVAL IS REQUIRED TO WAIVE THE 36" FIRE ACCESS AT THE RIDGE.

PO Box 3569
Mammoth Lakes, CA 93546
760.924.1800, fax 924.1801
commdev@mono.ca.gov

Building Division

PO Box 8
Bridgeport, CA 93517
760.932.5420, fax 932.5431
www.monocounty.ca.gov

Residential Solar Panel Installation

Figure 5. Vertical Rack Layout with Portrait Panel Orientation

CONSULT YOUR RACK SYSTEM PROVIDER FOR ASSISTANCE IN DETERMINING DIMENSION S1, OR ASSUME AN INITIAL VALUE OF 48 INCHES.

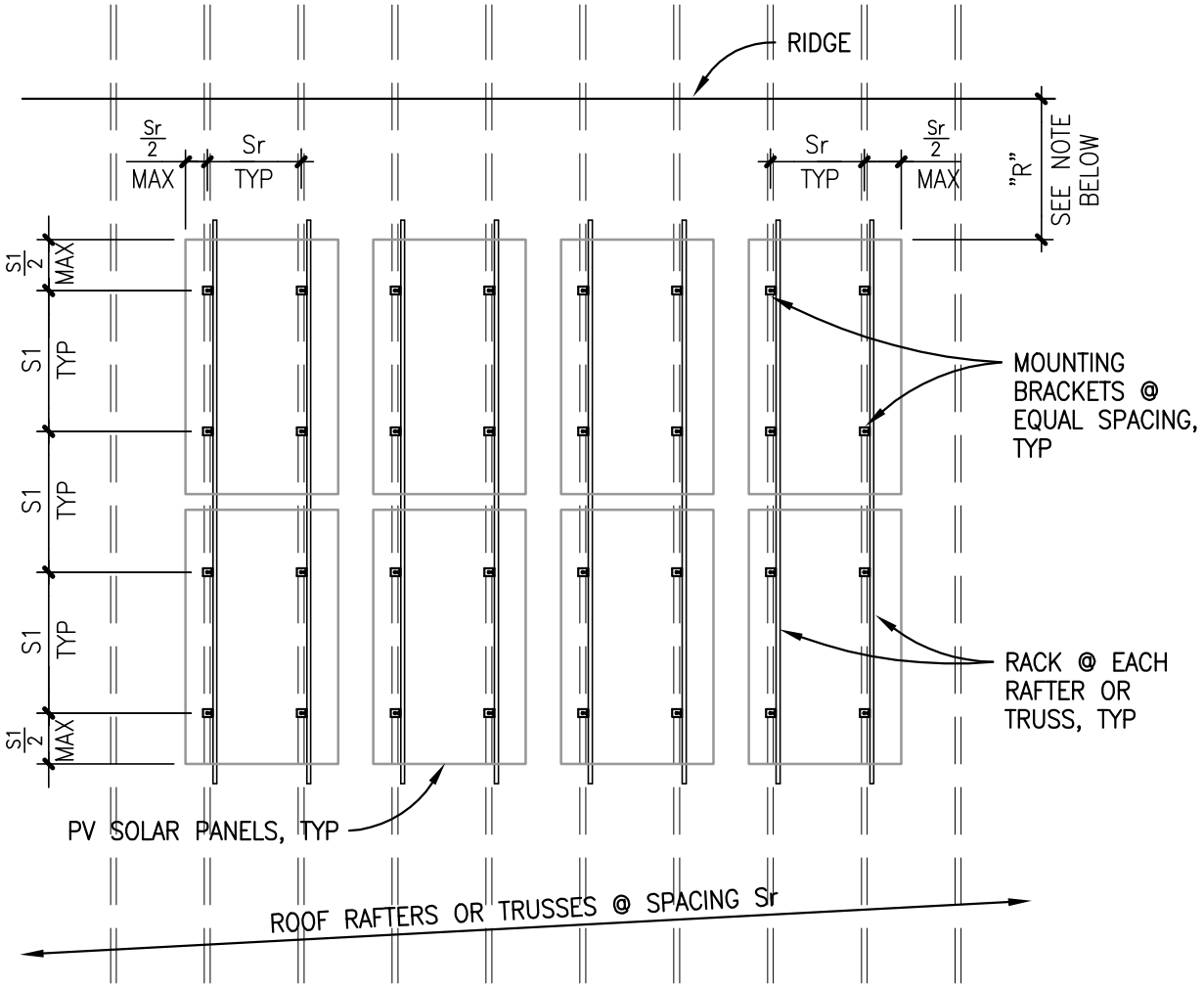

NUMBER OF PANELS IS ILLUSTRATIVE ONLY. PANEL ARRAY MAY EXTEND EXTEND HORIZONTALLY OR VERTICALLY BEYOND THAT SHOWN.

A_{actual}

SOLAR PANEL AREA PER MOUNTING BRACKET, A_{actual} (IN SQUARE FEET):

$$A_{actual} = \frac{S1 \times Sr}{144}.$$

S1 AND Sr ARE MEASURED IN INCHES.

DIMENSION "R" – CLEAR DISTANCE FROM RIDGE:

MAINTAIN 36" MINIMUM CLEARANCE FOR FIRE DEPARTMENT ACCESS. WHERE ROOF PITCH IS >6:12 (26.6°) OR WHERE ROOFING IS METAL SHINGLES, METAL DECK, SLATE, OR CONCRETE OR CLAY TILES, SOLAR PANELS SHALL BE INSTALLED WITHIN 12" OF RIDGE. FIRE OFFICIAL'S APPROVAL IS REQUIRED TO WAIVE THE 36" FIRE ACCESS AT THE RIDGE.

PO Box 3569
Mammoth Lakes, CA 93546
760.924.1800, fax 924.1801
commdev@mono.ca.gov

Building Division

PO Box 8
Bridgeport, CA 93517
760.932.5420, fax 932.5431
www.monocounty.ca.gov

Residential Solar Panel Installation

Figure 6. Vertical Rack Layout with Landscape Panel Orientation

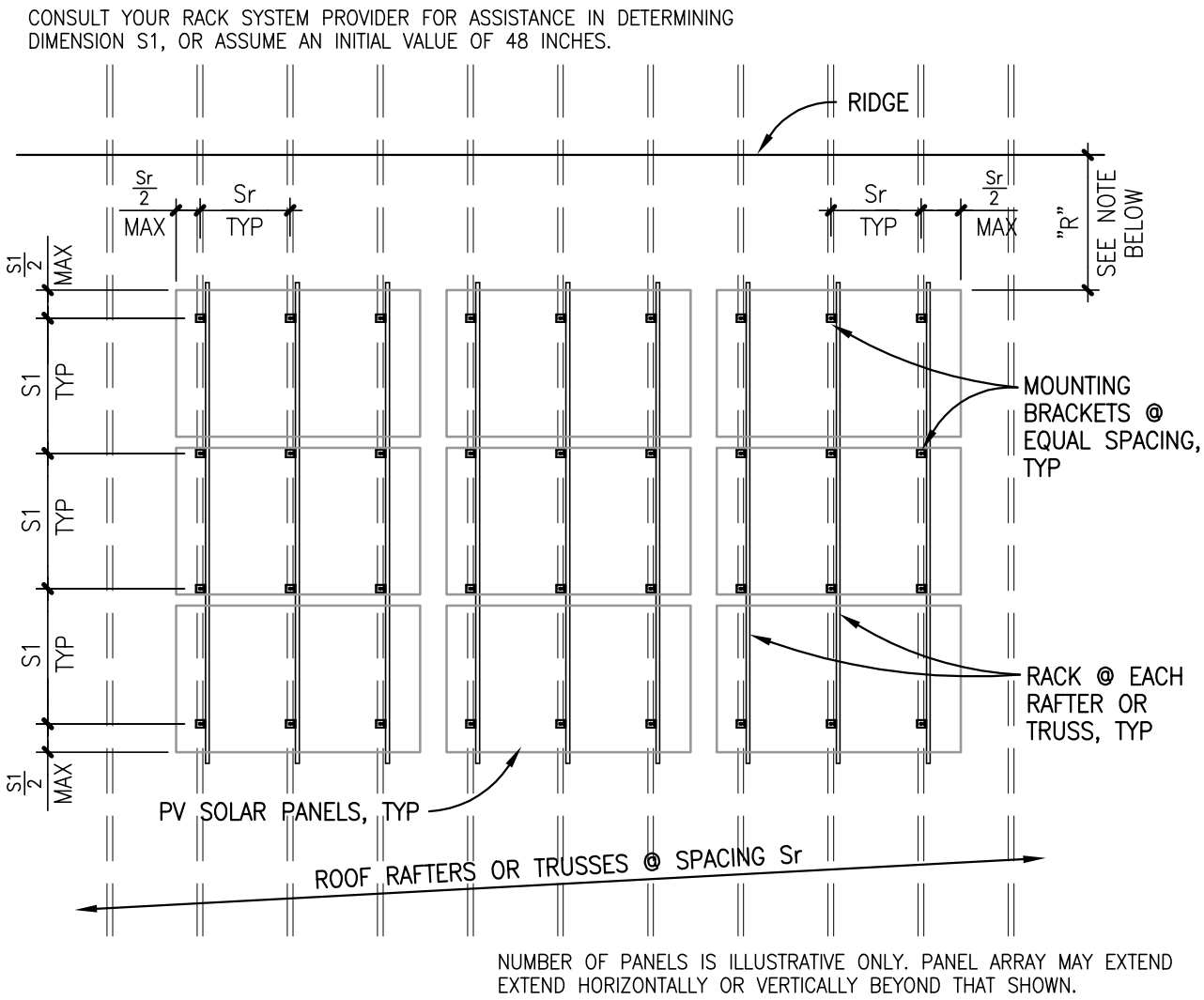

NUMBER OF PANELS IS ILLUSTRATIVE ONLY. PANEL ARRAY MAY EXTEND EXTEND HORIZONTALLY OR VERTICALLY BEYOND THAT SHOWN.

A_{actual}

SOLAR PANEL AREA PER MOUNTING BRACKET, A_{actual} (IN SQUARE FEET):

$$A_{actual} = \frac{S1 \times Sr}{144}.$$

S1 AND Sr ARE MEASURED IN INCHES.

DIMENSION "R" – CLEAR DISTANCE FROM RIDGE:

MAINTAIN 36" MINIMUM CLEARANCE FOR FIRE DEPARTMENT ACCESS. WHERE ROOF PITCH IS >6:12 (26.6°) OR WHERE ROOFING IS METAL SHINGLES, METAL DECK, SLATE, OR CONCRETE OR CLAY TILES, SOLAR PANELS SHALL BE INSTALLED WITHIN 12" OF RIDGE. FIRE OFFICIAL'S APPROVAL IS REQUIRED TO WAIVE THE 36" FIRE ACCESS AT THE RIDGE.

PO Box 3569
Mammoth Lakes, CA 93546
760.924.1800, fax 924.1801
commdev@mono.ca.gov

Building Division

PO Box 8
Bridgeport, CA 93517
760.932.5420, fax 932.5431
www.monocounty.ca.gov

Residential Solar Panel Installation

Figure 7. "L" Bracket Detail for Horizontal Rack Installation

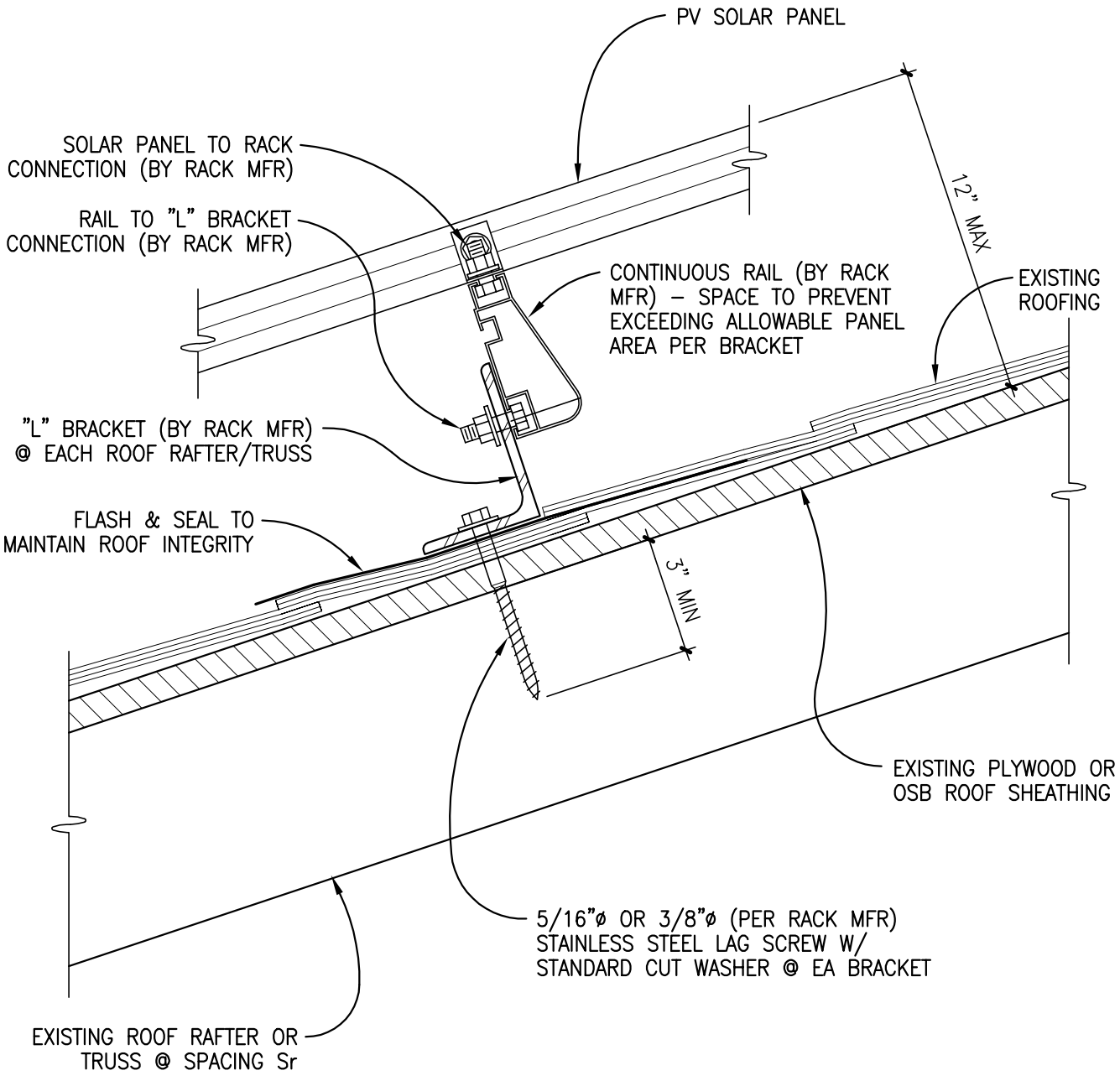

PO Box 3569
Mammoth Lakes, CA 93546
760.924.1800, fax 924.1801
commdev@mono.ca.gov

Building Division

PO Box 8
Bridgeport, CA 93517
760.932.5420, fax 932.5431
www.monocounty.ca.gov

Residential Solar Panel Installation

Figure 8. "T" Bracket Detail for Horizontal Rack Installation

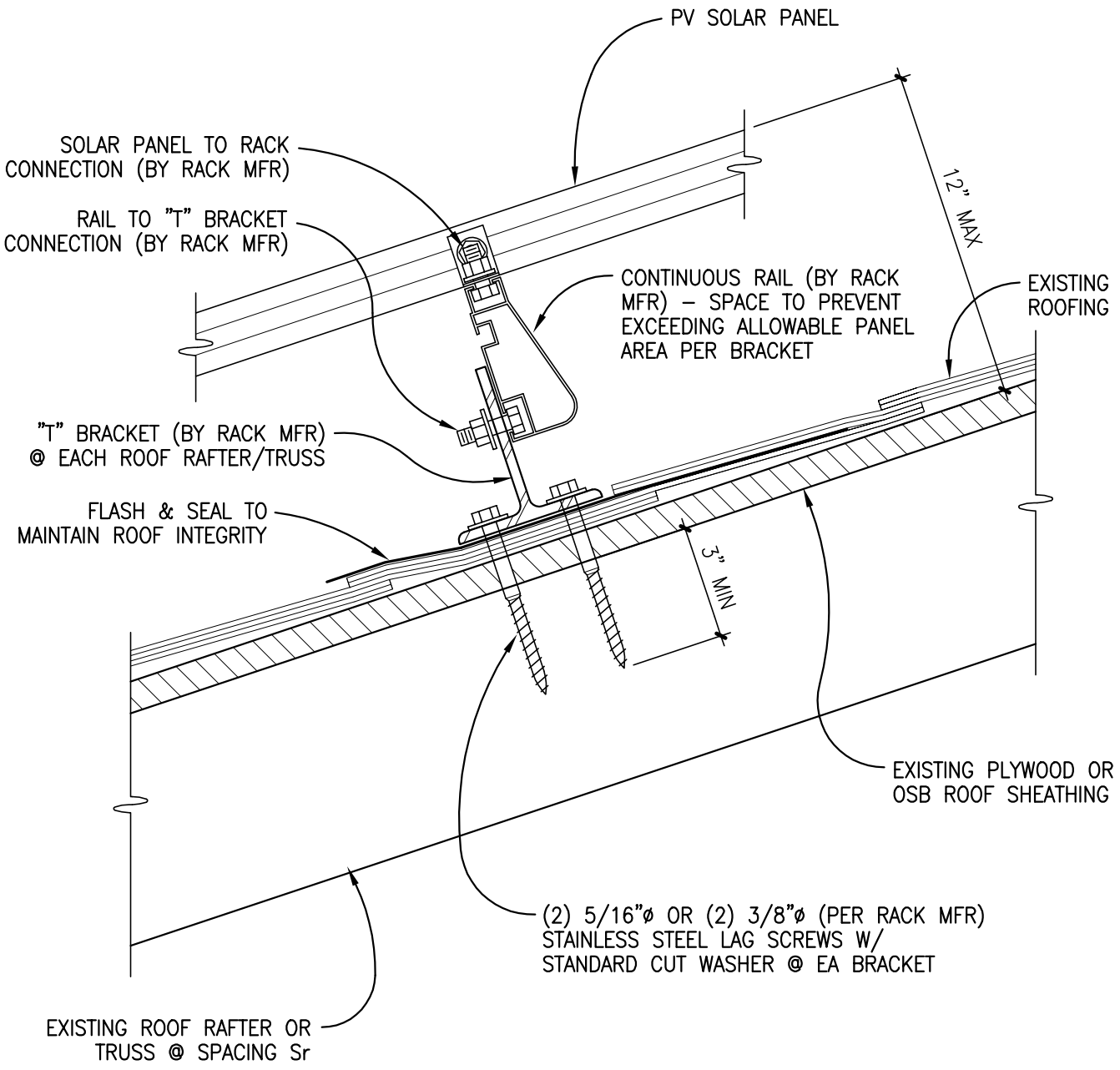

PO Box 3569
Mammoth Lakes, CA 93546
760.924.1800, fax 924.1801
commdev@mono.ca.gov

Building Division

PO Box 8
Bridgeport, CA 93517
760.932.5420, fax 932.5431
www.monocounty.ca.gov

Residential Solar Panel Installation

Figure 9. "L" Bracket Detail for Vertical Rack Installation

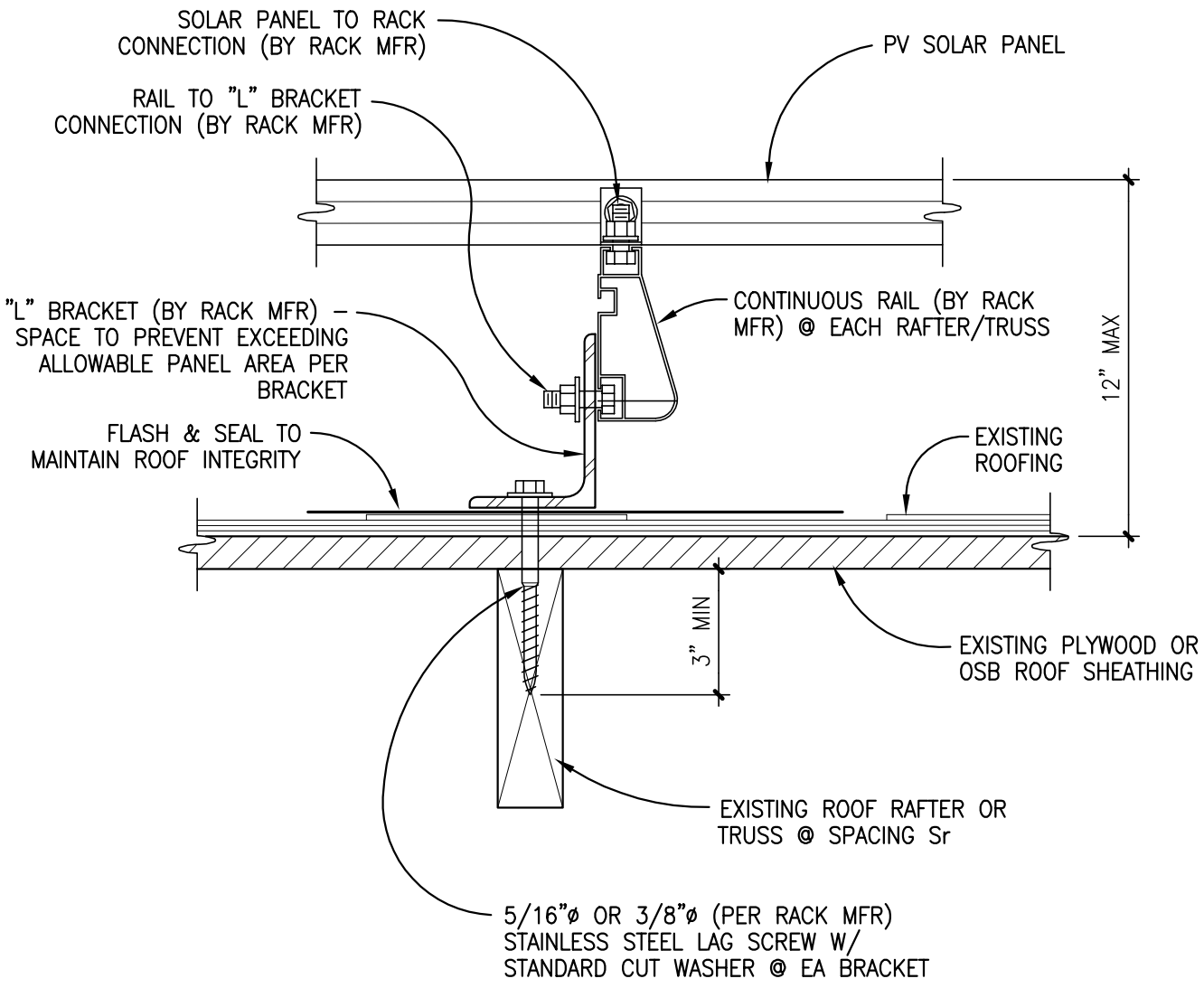

Mono County
Community Development Department

PO Box 3569
Mammoth Lakes, CA 93546
760.924.1800, fax 924.1801
commdev@mono.ca.gov

Building Division

PO Box 8
Bridgeport, CA 93517
760.932.5420, fax 932.5431
www.monocounty.ca.gov

Residential Solar Panel Installation

Table A. Gable or Hip Roof – Allowable Solar Panel Area per Mounting Bracket, A_{allow} (square feet), with Single 5/16" Lag Screw

Roof Pitch		Ground Snow Load, p_g (psf)										
Slope, S	Angle, θ_r	55	65	75	80	100	125	150	175	200	250	300
0:12	0°	22.1	22.1	22.1	22.1	22.1	22.1	22.1	22.1	22.1	22.1	22.1
1:12	4.8°	20.6	19.1	18.3	17.9	16.5	14.6	12.3	10.6	9.3	7.5	6.3
2:12	9.5°	11.6	10.7	10.1	9.9	9.0	7.4	6.2	5.4	4.7	3.8	3.2
3:12	14.0°	10.0	9.0	8.0	7.6	6.2	5.0	4.2	3.6	3.2	2.6	2.2
4:12	18.4°	8.9	7.0	6.2	5.8	4.7	3.8	3.2	2.8	2.5	2.0	1.7
5:12	22.6°	7.3	5.8	5.1	4.8	3.9	3.2	2.7	2.3	2.0	1.6	1.4
6:12	26.6°	6.3	4.9	4.3	4.1	3.3	2.7	2.3	2.0	1.7	1.4	1.2
7:12	30.3°	5.6	4.4	3.9	3.6	3.0	2.4	2.0	1.7	1.5	1.2	1.0
8:12	33.7°	5.1	4.0	3.5	3.3	2.7	2.2	1.8	1.6	1.4	1.1	0.9
10:12	39.8°	4.4	3.5	3.0	2.9	2.3	1.9	1.6	1.4	1.2	1.0	0.8
12:12	45.0°	4.0	3.1	2.8	2.6	2.1	1.7	1.4	1.2	1.1	0.9	0.7

Notes:

1. Solar panel racks must be attached with an L- or T-bracket and at least one lag screw at every roof rafter or roof truss.
2. Where L- or T-brackets with one lag screw do not provide a sufficient allowable solar panel area, A_{allow}, the value shown in the table may be multiplied by 2.0 with the use of T brackets with 2 lag screws. If the value 2x A_{allow} is still insufficient, rack spacing should be reduced.
3. Shaded portion of table represents an allowable solar panel area less than 4 square feet.
4. Lag screws and washers shall be stainless steel.
5. Lag screws shall be embedded a minimum of 3" into the roof rafter or roof truss. Thickness of roof sheathing, roofing materials, and mounting bracket thickness must be included when selecting the actual length of lag screw.
6. For 5/16" lag screws, pre-drill a 5/32" lead hole a minimum of 3" into the roof rafter or roof truss.

PO Box 3569
Mammoth Lakes, CA 93546
760.924.1800, fax 924.1801
commdev@mono.ca.gov

Building Division

PO Box 8
Bridgeport, CA 93517
760.932.5420, fax 932.5431
www.monocounty.ca.gov

Residential Solar Panel Installation

Table B. Gable or Hip Roof – Allowable Solar Panel Area per Mounting Bracket, A_{allow} (square feet), with Single 3/8" Lag Screw

Roof Pitch		Ground Snow Load, p_g (psf)										
Slope, S	Angle, θ_r	55	65	75	80	100	125	150	175	200	250	300
0:12	0°	25.0	25.0	25.0	25.0	25.0	25.0	25.0	25.0	25.0	25.0	25.0
1:12	4.8°	23.0	21.3	20.3	19.9	18.2	15.7	13.2	11.4	10.0	8.1	6.8
2:12	9.5°	12.9	11.8	11.2	11.0	9.7	7.9	6.7	5.7	5.1	4.1	3.4
3:12	14.0°	11.1	9.8	8.6	8.1	6.6	5.4	4.5	3.9	3.4	2.8	2.3
4:12	18.4°	9.5	7.5	6.6	6.2	5.1	4.1	3.5	3.0	2.6	2.1	1.8
5:12	22.6°	7.8	6.2	5.4	5.1	4.2	3.4	2.8	2.5	2.2	1.7	1.5
6:12	26.6°	6.7	5.3	4.7	4.4	3.6	2.9	2.4	2.1	1.9	1.5	1.3
7:12	30.3°	6.0	4.7	4.1	3.9	3.2	2.6	2.2	1.9	1.6	1.3	1.1
8:12	33.7°	5.4	4.3	3.8	3.5	2.9	2.3	2.0	1.7	1.5	1.2	1.0
10:12	39.8°	4.7	3.7	3.3	3.1	2.5	2.0	1.7	1.5	1.3	1.0	0.9
12:12	45.0°	4.3	3.4	3.0	2.8	2.3	1.8	1.5	1.3	1.2	0.9	0.8

Notes:

1. Solar panel racks must be attached with an L- or T-bracket and at least one lag screw at every roof rafter or roof truss.
2. Where L- or T-brackets with one lag screw do not provide a sufficient allowable solar panel area, A_{allow}, the value shown in the table may be multiplied by 2.0 with the use of T brackets with 2 lag screws. If the value 2x A_{allow} is still insufficient, rack spacing should be reduced.
3. Shaded portion of table represents an allowable solar panel area less than 4 square feet.
4. Lag screws and washers shall be stainless steel.
5. Lag screws shall be embedded a minimum of 3" into the roof rafter or roof truss. Thickness of roof sheathing, roofing materials, and mounting bracket thickness must be included when selecting the actual length of lag screw.
6. For 3/8" lag screws, pre-drill a 3/16" lead hole a minimum of 3" into the roof rafter or roof truss.

PO Box 3569
Mammoth Lakes, CA 93546
760.924.1800, fax 924.1801
commdev@mono.ca.gov

Building Division

PO Box 8
Bridgeport, CA 93517
760.932.5420, fax 932.5431
www.monocounty.ca.gov

Residential Solar Panel Installation

Table C. Monoslope Roof – Allowable Solar Panel Area per Mounting Bracket, A_{allow} (square feet), with Single 5/16" Lag Screw

Roof Pitch		Ground Snow Load, p_g (psf)										
Slope, S	Angle, θ_r	55	65	75	80	100	125	150	175	200	250	300
0:12	0°	22.1	22.1	22.1	22.1	22.1	22.1	22.1	22.1	22.1	22.1	22.1
0.5:12	2.4°	8.5	8.5	8.5	8.5	8.5	8.5	8.5	8.5	8.5	8.3	7.9
1:12	4.8°	8.5	8.5	8.5	8.5	8.5	8.3	7.9	7.5	7.2	6.6	6.1
1.5:12	7.1°	8.5	8.5	8.4	8.3	7.8	7.3	6.8	6.4	6.1	5.0	4.2
2:12	9.5°	8.5	8.0	7.7	7.6	7.1	6.5	6.1	5.4	4.7	3.8	3.2
3:12	14.0°	7.1	6.6	6.3	6.2	5.7	5.0	4.2	3.6	3.2	2.6	2.2
4:12	18.4°	6.5	6.0	5.6	5.5	4.7	3.8	3.2	2.8	2.5	2.0	1.7
5:12	22.6°	6.0	5.5	5.1	4.8	3.9	3.2	2.7	2.3	2.0	1.6	1.4
6:12	26.6°	5.7	4.9	4.3	4.1	3.3	2.7	2.3	2.0	1.7	1.4	1.2
7:12	30.3°	5.4	4.4	3.9	3.6	3.0	2.4	2.0	1.7	1.5	1.2	1.0
8:12	33.7°	5.1	4.0	3.5	3.3	2.7	2.2	1.8	1.6	1.4	1.1	0.9
10:12	39.8°	4.4	3.5	3.0	2.9	2.3	1.9	1.6	1.4	1.2	1.0	0.8
12:12	45.0°	4.0	3.1	2.8	2.6	2.1	1.7	1.4	1.2	1.1	0.9	0.7

Notes:

1. Solar panel racks must be attached with an L- or T-bracket and at least one lag screw at every roof rafter or roof truss.
2. Where L- or T-brackets with one lag screw do not provide a sufficient allowable solar panel area, A_{allow}, the value shown in the table may be multiplied by 2.0 with the use of T brackets with 2 lag screws. If the value 2x A_{allow} is still insufficient, rack spacing should be reduced.
3. Shaded portion of table represents an allowable solar panel area less than 4 square feet.
4. Lag screws and washers shall be stainless steel.
5. Lag screws shall be embedded a minimum of 3" into the roof rafter or roof truss. Thickness of roof sheathing, roofing materials, and mounting bracket thickness must be included when selecting the actual length of lag screw.
6. For 5/16" lag screws, pre-drill a 5/32" lead hole a minimum of 3" into the roof rafter or roof truss.

PO Box 3569
Mammoth Lakes, CA 93546
760.924.1800, fax 924.1801
commdev@mono.ca.gov

Building Division

PO Box 8
Bridgeport, CA 93517
760.932.5420, fax 932.5431
www.monocounty.ca.gov

Residential Solar Panel Installation

Table D. Monoslope Roof – Allowable Solar Panel Area per Mounting Bracket, A_{allow} (square feet), with Single 3/8" Lag Screw

Roof Pitch		Ground Snow Load, p_g (psf)										
Slope, S	Angle, θ_r	55	65	75	80	100	125	150	175	200	250	300
0:12	0°	25.0	25.0	25.0	25.0	25.0	25.0	25.0	25.0	25.0	25.0	25.0
0.5:12	2.4°	25.0	25.0	25.0	24.9	23.5	22.1	20.8	19.6	18.6	16.1	13.5
1:12	4.8°	9.6	9.6	9.6	9.6	9.6	9.2	8.8	8.3	8.0	7.3	6.8
1.5:12	7.1°	9.6	9.6	9.4	9.2	8.7	8.1	7.6	7.1	6.7	5.4	4.5
2:12	9.5°	9.6	9.0	8.6	8.5	7.9	7.2	6.7	5.7	5.1	4.1	3.4
3:12	14.0°	7.9	7.3	7.0	6.8	6.3	5.4	4.5	3.9	3.4	2.8	2.3
4:12	18.4°	7.2	6.6	6.2	6.1	5.1	4.1	3.5	3.0	2.6	2.1	1.8
5:12	22.6°	6.7	6.0	5.4	5.1	4.2	3.4	2.8	2.5	2.2	1.7	1.5
6:12	26.6°	6.3	5.3	4.7	4.4	3.6	2.9	2.4	2.1	1.9	1.5	1.3
7:12	30.3°	5.9	4.7	4.1	3.9	3.2	2.6	2.2	1.9	1.6	1.3	1.1
8:12	33.7°	5.4	4.3	3.8	3.5	2.9	2.3	2.0	1.7	1.5	1.2	1.0
10:12	39.8°	4.7	3.7	3.3	3.1	2.5	2.0	1.7	1.5	1.3	1.0	0.9
12:12	45.0°	4.3	3.4	3.0	2.8	2.3	1.8	1.5	1.3	1.2	0.9	0.8

Notes:

1. Solar panel racks must be attached with an L- or T-bracket and at least one lag screw at every roof rafter or roof truss.
2. Where L- or T-brackets with one lag screw do not provide a sufficient allowable solar panel area, Aallow, the value shown in the table may be multiplied by 2.0 with the use of T brackets with 2 lag screws. If the value 2x Aallow is still insufficient, rack spacing should be reduced.
3. Shaded portion of table represents an allowable solar panel area less than 4 square feet.
4. Lag screws and washers shall be stainless steel.
5. Lag screws shall be embedded a minimum of 3" into the roof rafter or roof truss. Thickness of roof sheathing, roofing materials, and mounting bracket thickness must be included when selecting the actual length of lag screw.
6. For 3/8" lag screws, pre-drill a 3/16" lead hole a minimum of 3" into the roof rafter or roof truss.

Mono County
Community Development Department

PO Box 3569
Mammoth Lakes, CA 93546
760.924.1800, fax 924.1801
commdev@mono.ca.gov

Building Division

PO Box 8
Bridgeport, CA 93517
760.932.5420, fax 932.5431
www.monocounty.ca.gov

Residential Solar Panel Installation

PRESCRIPTIVE INSTALLATION PROCEDURE FLOWCHART

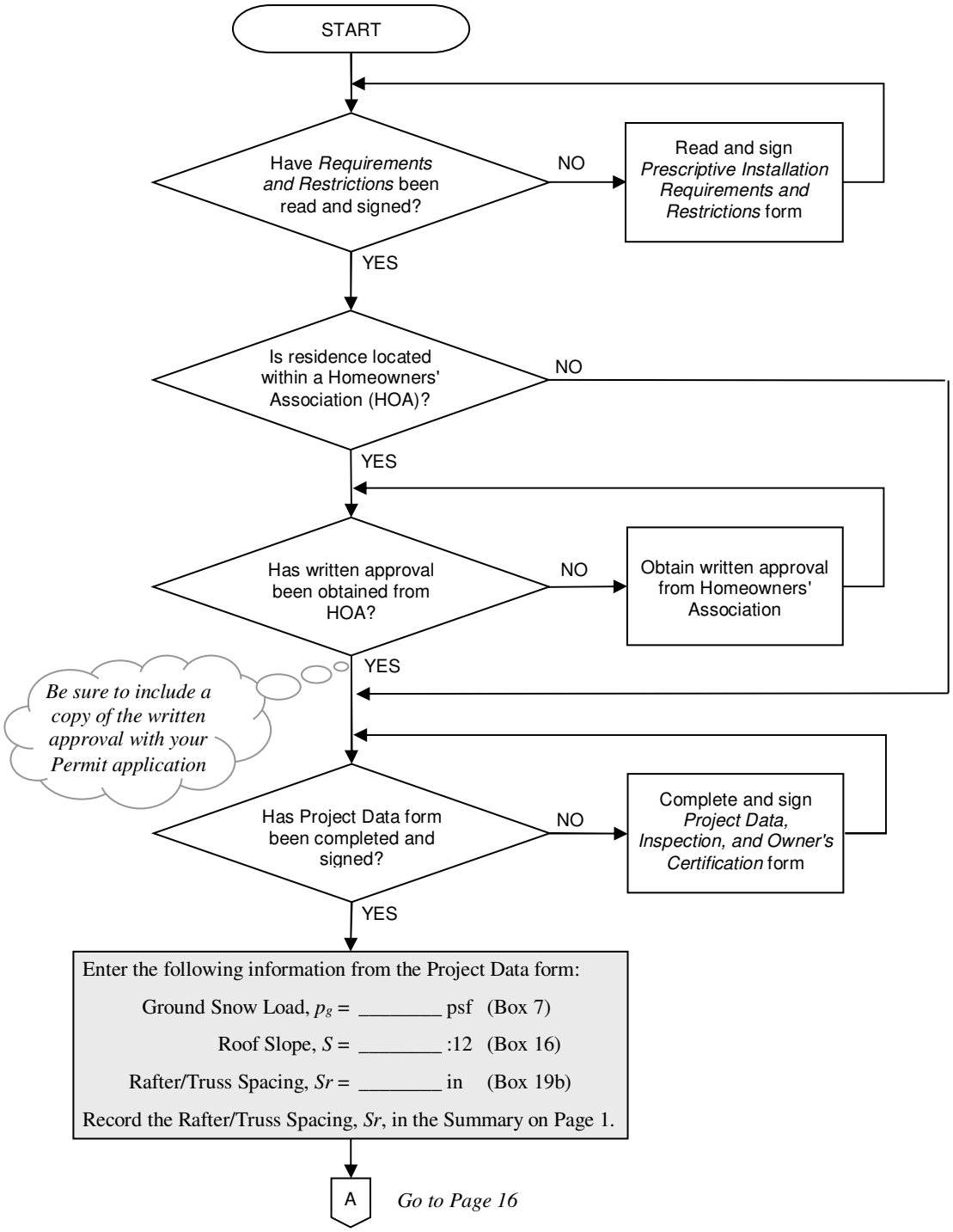

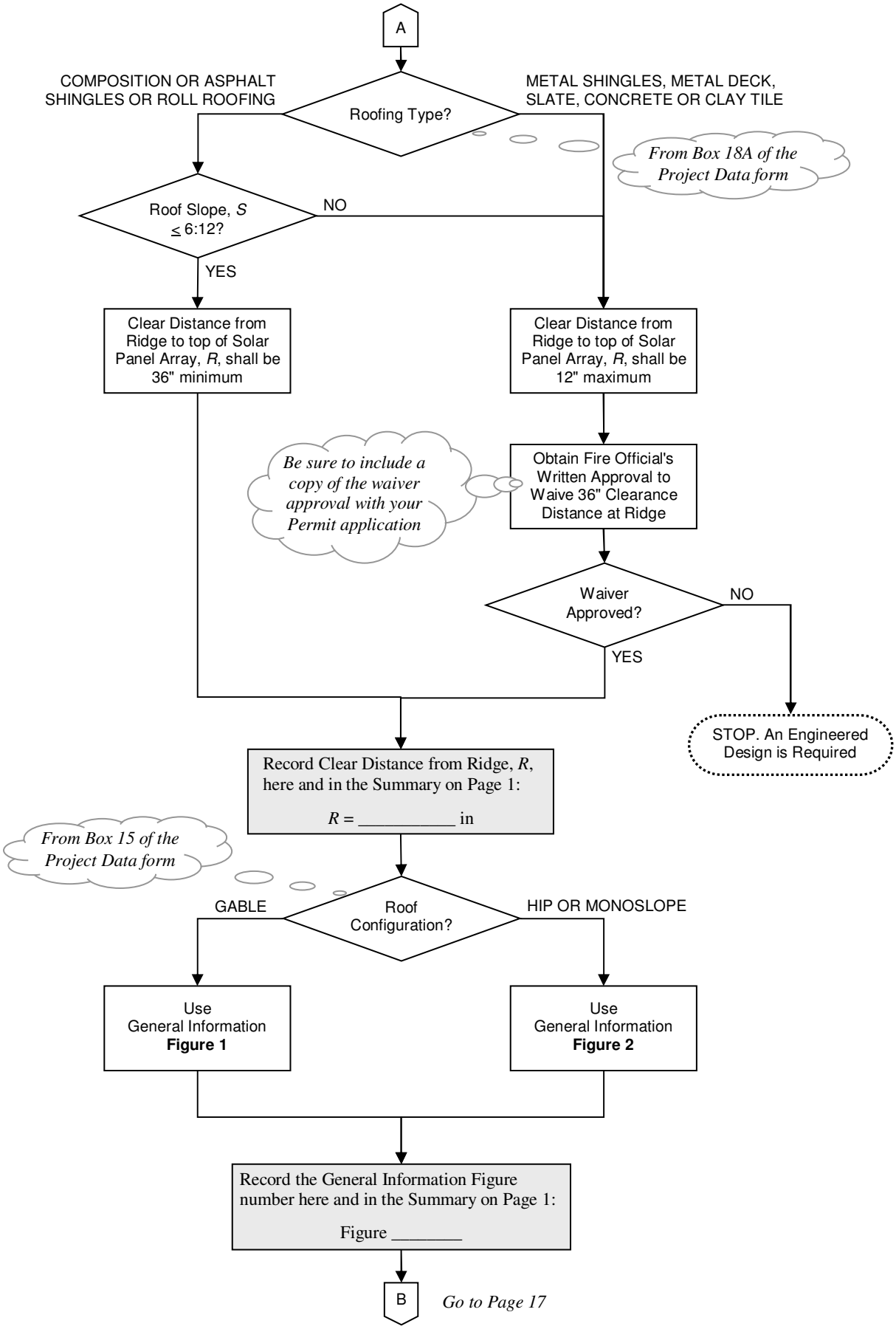
A
COMPOSITION OR ASPHALT SHINGLES OR ROLL ROOFING
Roofing Type?
METAL SHINGLES, METAL DECK, SLATE, CONCRETE OR CLAY TILE
From Box 18A of the Project Data form
Roof Slope, S ≤ 6:12?
NO
YES
Clear Distance from Ridge to top of Solar Panel Array, R, shall be 36" minimum
Clear Distance from Ridge to top of Solar Panel Array, R, shall be 12" maximum
Be sure to include a copy of the waiver approval with your Permit application
Obtain Fire Official's Written Approval to Waive 36" Clearance Distance at Ridge
Waiver Approved?
NO
YES
STOP. An Engineered Design is Required
Record Clear Distance from Ridge, R, here and in the Summary on Page 1:
R = _____ in
From Box 15 of the Project Data form
GABLE
Roof Configuration?
HIP OR MONOSLOPE
Use General Information Figure 1
Use General Information Figure 2
Record the General Information Figure number here and in the Summary on Page 1:
Figure _____
B
Go to Page 17

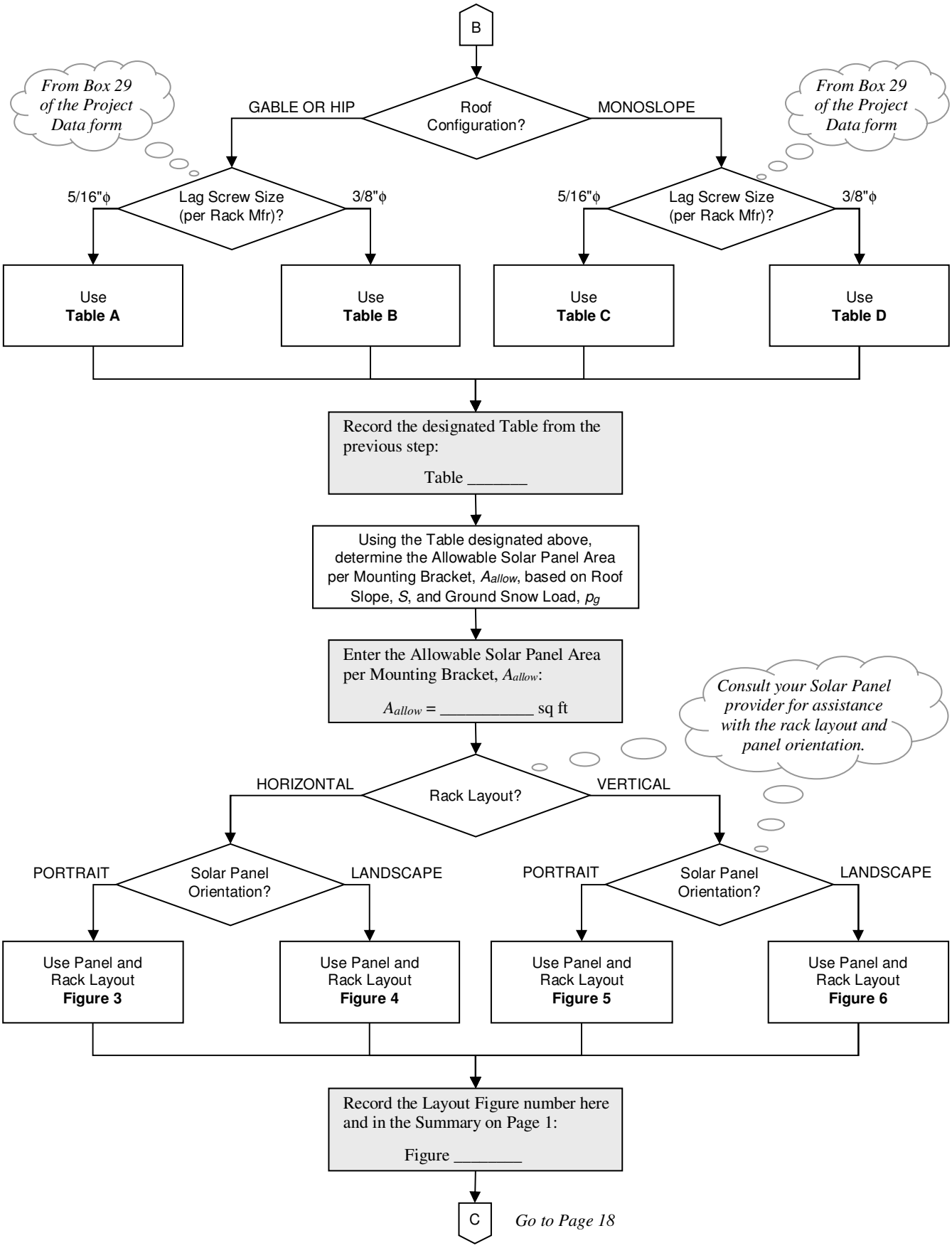
B
From Box 29 of the Project Data form
GABLE OR HIP
Roof Configuration?
MONOSLOPE
From Box 29 of the Project Data form
5/16"ϕ
Lag Screw Size (per Rack Mfr)?
3/8"ϕ
5/16"ϕ
Lag Screw Size (per Rack Mfr)?
3/8"ϕ
Use Table A
Use Table B
Use Table C
Use Table D
Record the designated Table from the previous step:
Table _____
Using the Table designated above, determine the Allowable Solar Panel Area per Mounting Bracket, A_{allow}, based on Roof Slope, S, and Ground Snow Load, p_g
Enter the Allowable Solar Panel Area per Mounting Bracket, A_{allow}:
A_{allow} = _____ sq ft
Consult your Solar Panel provider for assistance with the rack layout and panel orientation.
HORIZONTAL
Rack Layout?
VERTICAL
PORTRAIT
Solar Panel Orientation?
LANDSCAPE
PORTRAIT
Solar Panel Orientation?
LANDSCAPE
Use Panel and Rack Layout Figure 3
Use Panel and Rack Layout Figure 4
Use Panel and Rack Layout Figure 5
Use Panel and Rack Layout Figure 6
Record the Layout Figure number here and in the Summary on Page 1:
Figure _____
C

Go to Page 18

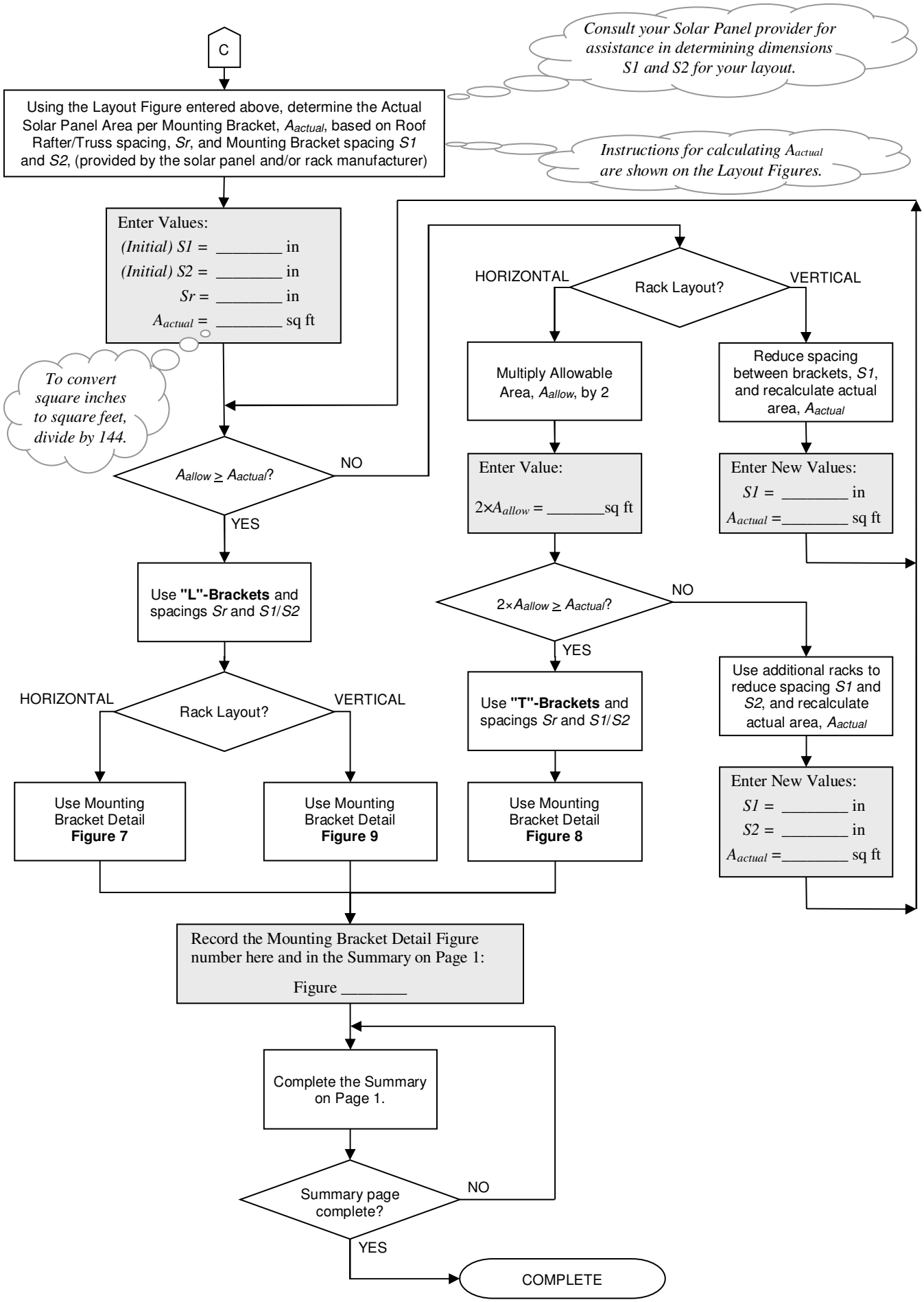
C
Consult your Solar Panel provider for assistance in determining dimensions S1 and S2 for your layout.
Using the Layout Figure entered above, determine the Actual Solar Panel Area per Mounting Bracket, A_{actual}, based on Roof Rafter/Truss spacing, Sr, and Mounting Bracket spacing S1 and S2, (provided by the solar panel and/or rack manufacturer)
Instructions for calculating A_{actual} are shown on the Layout Figures.
Enter Values:
(Initial) S1 = _____ in
(Initial) S2 = _____ in
Sr = _____ in
A_{actual} = _____ sq ft
To convert square inches to square feet, divide by 144.
$A_{allow} \geq A_{actual}$?
NO
YES
Use "L"-Brackets and spacings Sr and S1/S2
Rack Layout?
HORIZONTAL
VERTICAL
Use Mounting Bracket Detail Figure 7
Use Mounting Bracket Detail Figure 9
Rack Layout?
HORIZONTAL
VERTICAL
Multiply Allowable Area, A_{allow}, by 2
Reduce spacing between brackets, S1, and recalculate actual area, A_{actual}
Enter Value:
$2 \times A_{allow}$ = _____sq ft
Enter New Values:
S1 = _____ in
A_{actual} =_____ sq ft
$2 \times A_{allow} \geq A_{actual}$?
NO
YES
Use "T"-Brackets and spacings Sr and S1/S2
Use additional racks to reduce spacing S1 and S2, and recalculate actual area, A_{actual}
Use Mounting Bracket Detail Figure 8
Enter New Values:
S1 = _____ in
S2 = _____ in
A_{actual} =_____ sq ft
Record the Mounting Bracket Detail Figure number here and in the Summary on Page 1:
Figure _____
Complete the Summary on Page 1.
Summary page complete?
NO
YES
COMPLETE